18”-24”-30” Kiva Fireplace

WOOD BURNING INSTALLATION MANUAL

Frame Models: **Orno**
Santa Fe
Navajo
Zuni

Keep these instructions for future use.

This fireplace is to be installed ONLY by a construction industry licensed contractor. Any permits and construction industry inspections required for installation should be obtained by this contractor.

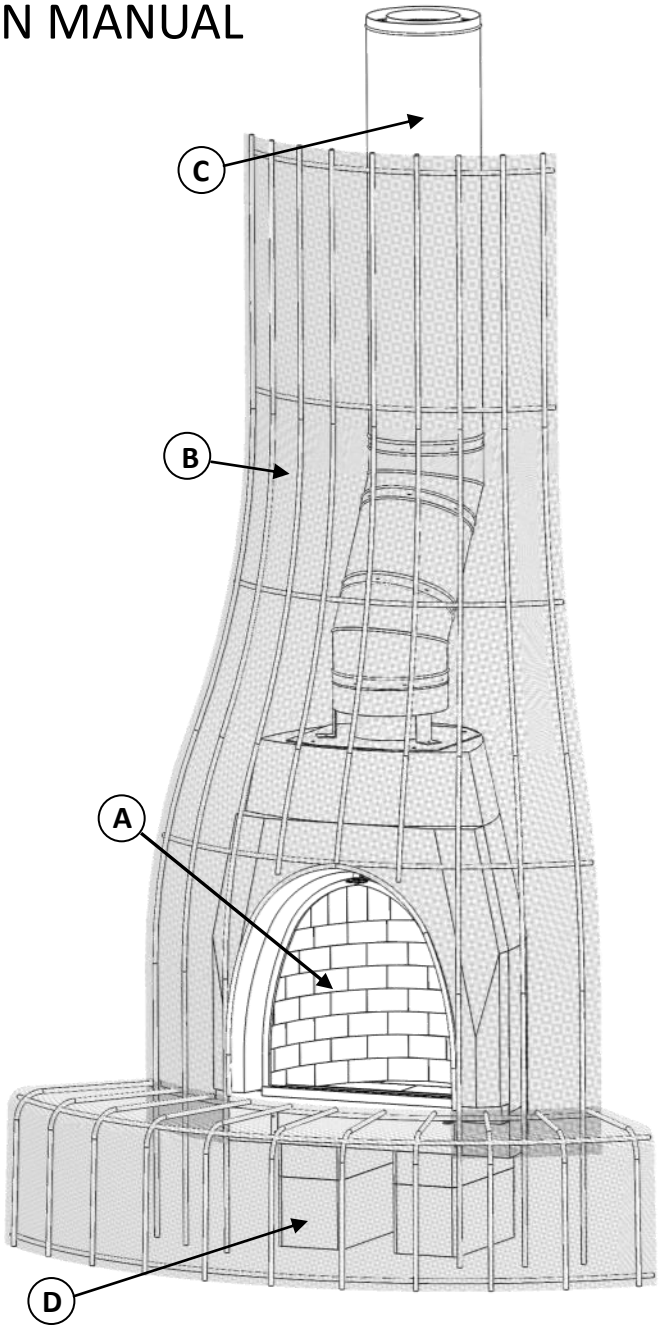

The Adobelite Fireplace System consists of:

A) KIVA FIREBOX - A pre-cast firebox consisting of real hand laid firebrick and lightweight concrete.

B) EXTERIOR FIREPLACE FRAME - A tubular steel and diamond-mesh frame. The frame is finished with stucco after installation.

C) AIR-COOLED CHIMNEY - Lightweight stainless steel double walled air-cooled chimney is used for venting the fireplace.

D) FIREBOX PEDESTAL - Concrete blocks are used to elevate the firebox.
(Concrete blocks are not included)

NOTE: All ***warnings*** are outlined in this manual and must be adhered to by the installer and the buyer. Failure to do so will nullify the manufacturer’s warranty, and may cause serious fire hazard.

RV-11.1.2012

WARNINGS AND GENERAL SAFETY PRECAUTIONS

IMPORTANT: ***THESE INSTRUCTIONS MUST BE LEFT WITH HOMEOWNER***

ALL WARNINGS OUTLINED IN THIS MANUAL MUST BE STRICTLY ADHERED TO BY THE INSTALLER AND HOMEOWNER.
FAILURE TO FOLLOW these installation instructions will **VOID THE WARRANTY** and may cause a serious **FIRE HAZARD.**

This fireplace is to be installed ONLY by a construction industry licensed contractor. Any permits and construction industry inspections required for installation should be obtained by this contractor.

Fully **READ** and **UNDERSTAND** all instructions carefully before beginning installation.

DO NOT modify your fireplace in any way. Any modification will void the warranty and create a potential fire hazard.

Before burning your first fire, fully read the **"Homeowners Operation Manual".**

Combustion Air Intake of fireplace must be kept clear of debris at all times.

Do not **store** or **use** flammable liquids or aerosols near this fireplace.

Never leave the fireplace burning while unattended.

Children should never be left unattended while the fireplace is in use.

WARNING: Only use approved chimney and termination systems outlined in this manual.

WARNING: This fireplace is **NOT** designed for wall termination. Fireplace must be vented vertically.

TABLE OF CONTENTS

LISTING DATA PLATE / LOCATION

The Adobelite Kiva Fireplace is a factory built fireplace tested to U.L. 127. Locate the Listing Data Plate on the upper left backside of the Kiva Firebox Front Arch. Record the model, size, and serial number listed on the data plate below.

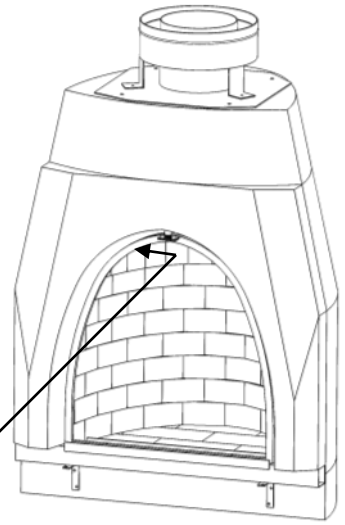

MODEL TYPE / SIZE

SERIAL NUMBER

MANUFACTURED BY ADOBELITE
ADOBELITE, LLC
ALBUQUERQUE NM 87123
MODEL TYPE ( )

FIREPLACE INTENDED FOR USE WITH SOLID WOOD FUEL ONLY. SEE ADOBELITE INSTALLATION AND OPERATING INSTRUCTIONS FOR THIS MODEL. CONTACT LOCAL BUILDING OFFICIAL PRIOR TO INSTALLATION.

LISTED FACTORY BUILT FIREPLACE
Wiemann Hamer
TESTED TO U.L. 127
FIREPLACE
SERIAL NO.

FIRE CHAMBER INTENDED FOR USE WITH FMI, HEATILATOR, OR SUPERIOR CHIMNEY AND ADOBELITE FIREPLACE PARTS. DO NOT USE FIREPLACE INSERT OR OTHER PRODUCTS NOT SPECIFIED FOR USE WITH THIS MODEL.

▼ ▼ ▼ WARNINGS ▼ ▼ ▼ WARNINGS ▼ ▼ ▼ WARNINGS ▼ ▼ ▼ WARNINGS ▼ ▼ ▼ WARNINGS ▼ ▼ ▼

FIREPLACE HAS NOT BEEN TESTED WITH GLASS DOOR DURING WOOD BURNING. TO REDUCE RISK OF INJURY, DO NOT OPERATE WITH GLASS DOOR IN PLACE.

HEARTH EXTENSIONS MUST BE INSTALLED ACCORDING TO THE INSTALLATION INSTRUCTIONS TO PREVENT RISK OF FIRE DAMAGE. DO NOT DRY CLOTHING ON HEARTH.

FOR OPERATION, THIS FIREPLACE NEEDS SUFFICIENT AIR. IMPROPER OPERATION MAY RESULT IN STARVING OTHER FUEL-BURNING APPLIANCES OF COMBUSTION. VENTILATION AND DILUTION OF AIR REQUIRES OUTSIDE AIR AS PER INSTALLATION INSTRUCTIONS. DO NOT OVERFIRE UNIT.

THIS FIREPLACE HAS NOT BEEN TESTED WITH AN UNVENTED GAS LOG SET. DO NOT INSTALL AN UNVENTED GAS LOG SET IN THIS FIREPLACE.

DO NOT USE FIREPLACE TO COOK OR WARM FOODS.

CLEARANCE: UNIT TO BACK/SIDE WALLS 3"
CHIMNEY TO FRAMING CHASE 2"
FIREPLACE OPENING TO SIDE WALL 18"

IF THE FIREPLACE IS CONVERTED TO GAS, THE DAMPER MUST BE FIXED IN A PERMANENTLY OPEN POSITION.

FIG. 1 - LISTING DATA PLATE LOCATION

PLEASE FILL IN THE FOLLOWING INFORMATION FOR FUTURE REFERENCE

Model Type / Size: _____ **Date Purchased:** _____ **Date Installed:** _____

Frame Style: _____ **Dealership Purchased at:** _____

Serial Number: _____ **Dealership Phone #:** _____

Chimney Pipe Brand: _____ **Chimney Pipe Size (Inner/Outer):** _____

Notes: _____

_____

_____

KIVA18 FIREBOX DIMENSIONS:

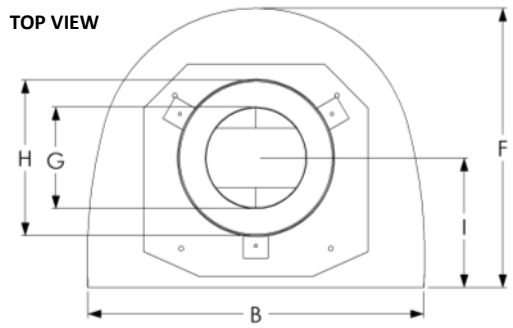

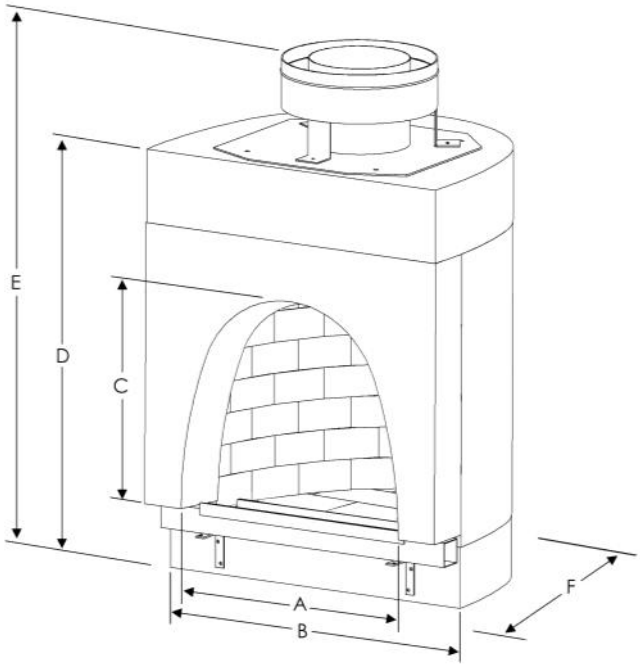

CLEARANCES TO COMBUSTIBLES	
SIDES/BACK	1”
FACE	All framing along firebox face must be non-combustible
HEARTH EXTENTION	18”
CHIMNEY	2”

	A	B	C	D	E	F	G	H	I
KIVA 18	20 $^1/_4$”	27”	18 $^1/_4$”	35”	43”	22 $^1/_2$”	8” MIN.	12”	10 $^1/_2$”

KIVA24 FIREBOX DIMENSIONS:

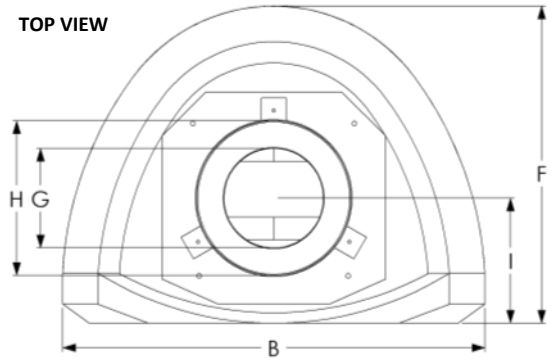

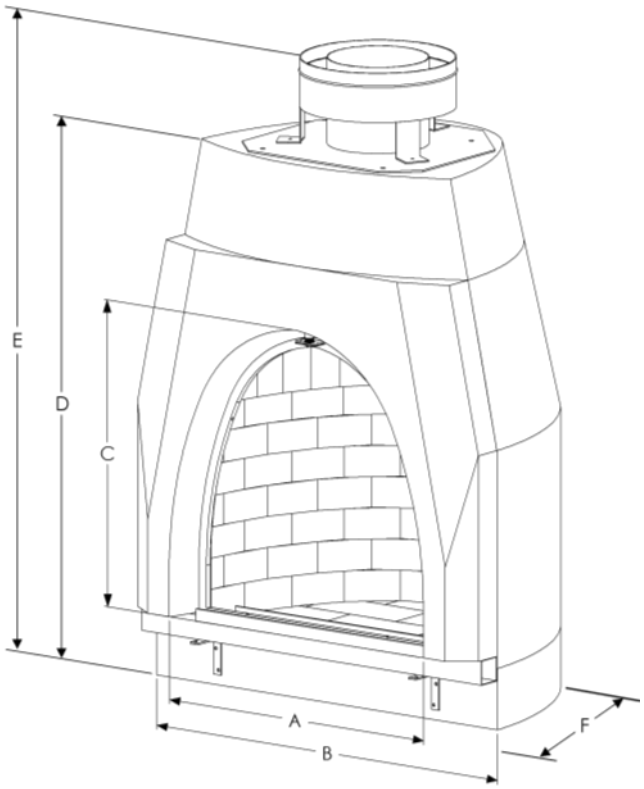

CLEARANCES TO COMBUSTIBLES	
SIDES/BACK	1”
FACE	All framing along firebox face must be non-combustible
HEARTH EXTENTION	18”
CHIMNEY	2”

	A	B	C	D	E	F	G	H	I
KIVA 24	25 $^1/_4$”	34”	25”	44”	52”	25 $^1/_2$”	8” MIN.	12”	10 $^1/_2$”

KIVA30 FIREBOX DIMENSIONS:

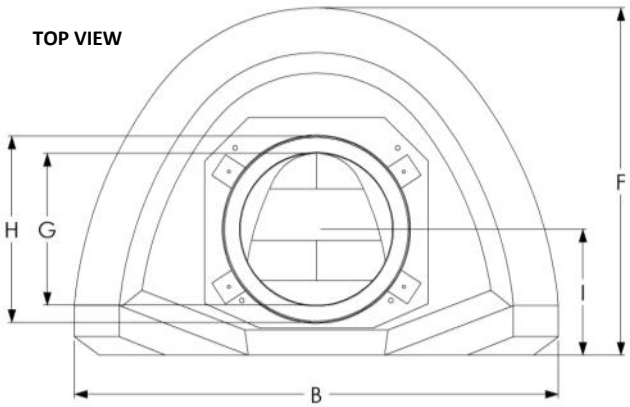

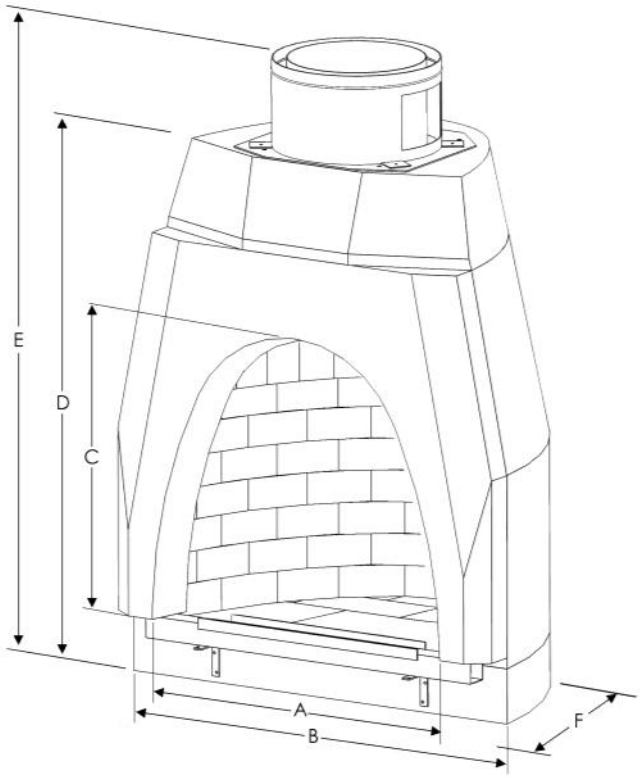

CLEARANCES TO COMBUSTIBLES	
SIDES/BACK	1”
FACE	All framing along firebox face must be non-combustible
HEARTH EXTENTION	18”
CHIMNEY	2”

	A	B	C	D	E	F	G	H	I
KIVA 30	30”	40”	27 $^1/_4$”	48 $^1/_2$”	56 $^1/_2$”	28”	10” MIN.	15”	12 $^1/_2$”

Fireplace installation must be in compliance with local building codes. Before installing the fireplace, consult the local construction industry to ensure that you are in compliance with all applicable codes, including permits and inspections.

WARNING: THE FIREBOX MUST BE FINISHED WITH THE ADOBELITE KIVA METAL FRAME OR OTHER NON-COMBUSTIBLE MATERIALS. CLEARANCES TO COMBSTIBLE MATERIALS AND FRAMING MUST BE MAINTAINED.

CHIMNEY REQUIREMENTS

WOOD BURNING

For minimum chimney sizes and types see table below. Certified equivalents tested and listed to UL Test Procedure 103, and ULC S604 rated to 1700°F or 2100°F may also be used if minimum chimney diameter is adhered to.

	Chimney Type and Sizes	Minimum Clearance	I.D. Chase Size
KIVA 18	**8” ID/12” OD Air-Cooled** (FMI or Vanguard 8DM, Lennox TF8, Heatilator SL300)	2”	17 $^1/_2$”x 17 $^1/_2$”
KIVA 24	**8” ID/12” OD Air-Cooled** (FMI or Vanguard 8DM, Lennox TF8, Heatilator SL300)	2”	17 $^1/_2$”x 17 $^1/_2$”
KIVA 30	**10” ID/15” OD Air-Cooled** (FMI or Vanguard 12DM, Lennox TF10, Simpson Heatilator SL1100)	2”	20 $^1/_2$”x 20 $^1/_2$”

TABLE 1. chimney requirements

WARNING! B-Vent Chimney should never be used when solid fuels are to be burned!

FIREPLACE LAYOUT AND FIREBOX PEDESTAL:

CHIMNEY CHASE REQUIREMENTS

An enclosed chimney chase should be constructed with a minimum open clear space specified by *I.D. Chase Size* in TABLE 1, Page 4. Framing should be constructed of 2 x 4 lumber or heavier. Fire-blocking is required between the joists in which the flue will be installed.

When an exterior roof chase is constructed (see FIG. 2), a ½" plywood or wafer board should cap the chase in which a minimum diameter circle, of 2" larger than the pipe diameter, should be removed. The chimney must terminate at least 2'0" above the parapet or anything else within 10' (see 10' rule on page 13).

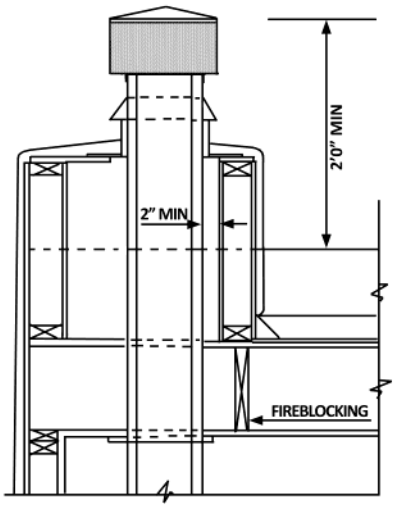

FIG. 2 - CHIMNEY CHASE

WOOD FLOOR REQUIREMENTS (FIG. 3)

If the fireplace is going to be installed over a wood or vinyl floor a sheet of $^{1}/_{4}$"x3'x3' masonry board needs to be placed on the floor (tight in the corner, or against the flat-wall centered on the center line (see chart below) prior to any layout or installation.

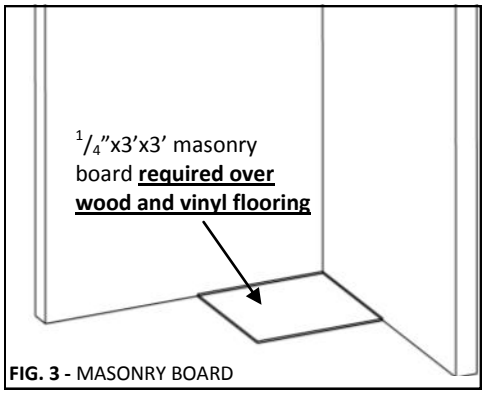

FIG. 3 - MASONRY BOARD

CARPET

Carpet and padding will need to be removed up to the hearth line. See FIG. 4 and FIG. 5 below.

LAYOUT (FIG. 4, FIG. 5)

Begin the layout by drawing a center line at 45 degrees for a corner installation, or perpendicular to the wall for a flat-wall installation. Next, draw the baseline (dimension D - refer to FIG. 4 below and FIG. 5 on page 8) perpendicular to the center line. The base line will be aligned with the front edge of the Firebox Base and the Firebox Pedestal.

CORNER LAYOUT

18" FIREBOX MODELS				
MODEL	**A**	**B**	**C**	**D**
	Frame at Ceiling	**Frame at Hearth**	**Hearth**	**Baseline**
Ornito	2'2"	2'10"	4'3"	2'4"
Santa Fe	2'4"	3'4"	4'9"	2'4"

24" FIREBOX MODELS				
MODEL	**A**	**B**	**C**	**D**
	Frame at Ceiling	**Frame at Hearth**	**Hearth**	**Baseline**
Orno	2'2"	3'2"	4'5"	2'5"
Santa Fe	2'6"	3'6"	4'11"	2'5"
Navajo	3'0"	4'0"	4'11"	2'5"
Zuni	3'0"	4'0"	5'5"	2'5"

30" FIREBOX MODELS				
MODEL	**A**	**B**	**C**	**D**
	Frame at Ceiling	**Frame at Hearth**	**Hearth**	**Baseline**
Orno	2'6"	3'6"	4'11"	2'9"
Santa Fe	2'8"	3'8"	5'1"	2'9"
Navajo	3'2"	4'2"	5'1"	2'9"
Zuni	3'2"	4'2"	5'7"	2'9"

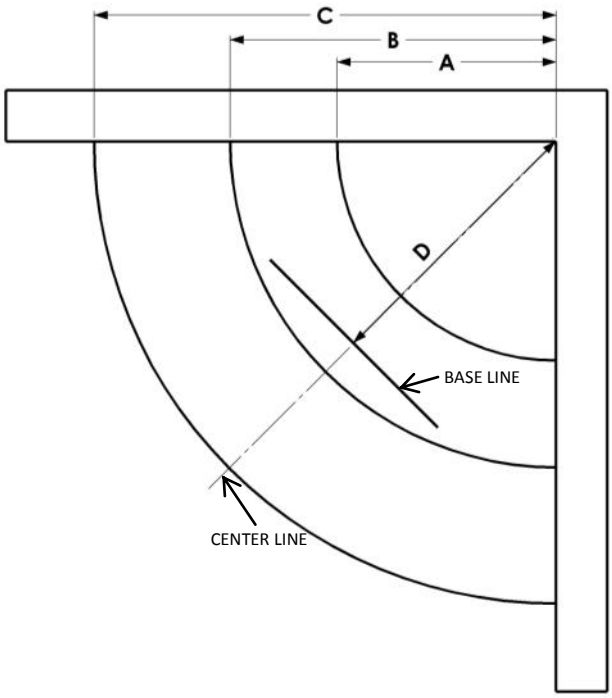

FIG. 4 - CORNER LAYOUT

FIREBOX PEDESTAL:

Standard Hearth Height of 18”

(Note: Concrete Blocks are not included with the Adobelite Fireplace Kit and must be purchased separately)

Concrete Masonry Units (C.M.U) are used to construct the Firebox Pedestal. The overall height of the pedestal should be 12”. A combination of two 8”x8”x16” and two 4”x8”x16” CMU can be stacked (as shown in FIG 6), or any other combination of concrete blocks can also be used as long as the overall height is 12”.

1) Position the front edge of the blocks with the Firebox Base Line. Refer to Block Spacing dimension (H) in positioning the width of the block pedestal. The blocks should be equally spaced from the center line.

2) Adhere the concrete blocks to each other and to the concrete slab / masonry board as they are assembled using mortar or a construction adhesive such as Liquid Nails or F26.

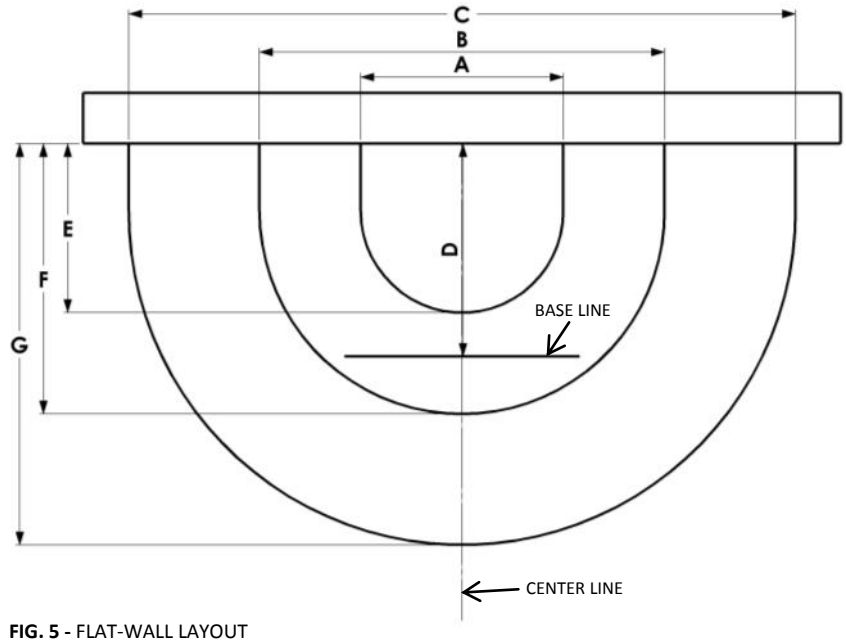

FIG. 5 - FLAT-WALL LAYOUT

24” FIREBOX MODELS							
MODEL	**A**	**B**	**C**	**D**	**E**	**F**	**G**
	Width at Ceiling	**Width at Firebox**	**Width of Hearth**	**Baseline**	**Depth at Ceiling**	**Depth at Firebox**	**Depth of Hearth**
Orno	2’0”	4’0”	6’7”	1’11”	1’8”	2’8”	4’0”
Santa Fe	1’6”	4’0”	6’7”	1’11”	1’5”	2’8”	4’0”
Navajo	1’6”	5’0”	6’7”	1’11”	1’5”	2’8”	4’0”
Zuni	1’6”	5’0”	7’7”	1’11”	1’5”	3’3”	4’6”

30” FIREBOX MODELS							
MODEL	**A**	**B**	**C**	**D**	**E**	**F**	**G**
	Width at Ceiling	**Width at Firebox**	**Width of Hearth**	**Baseline**	**Depth at Ceiling**	**Depth at Firebox**	**Depth of Hearth**
Orno	2’8”	5’0”	7’5”	2’1”	2’0”	3’0”	4’4”
Santa Fe	2’2”	5’0”	7’5”	2’1”	1’9”	3’0”	4’4”
Navajo	2’2”	6’0”	7’5”	2’1”	1’9”	3’0”	4’4”
Zuni	2’2”	6’0”	8’5”	2’1”	1’9”	3’6”	4’10”

For Hearth Height below 18”

Concrete Floor

When working on a concrete floor, the base section (shown in step 1, page 9) can be set directly on the floor if desired, for a 5” hearth height.

Wood Floor

The hearth height can also be lowered to 11” for a wood floor. If you plan to lower the firebox pedestal lower than 8”, you must use a heat barrier consisting of: 1) a layer of 1 ¼” thick split firebrick, 2) a 16 gauge steel barrier (the same size as the base, and 3) another layer of 1 ¼” firebrick. The steel barrier should be sandwiched in-between the firebrick. *Only adjust the base pedestal height if:* 1) you ordered a custom frame at that height, or 2) you feel comfortable performing the necessary modifications to the frame.

	18” Firebox	24” Firebox	30” Firebox
H - Block Spacing	5”	6”	9”

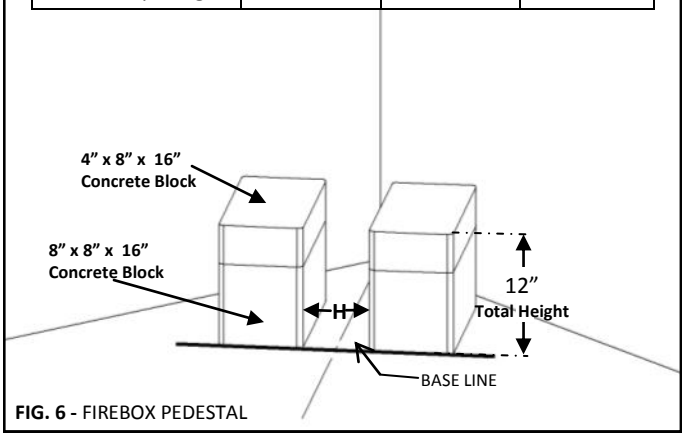

FIG. 6 - FIREBOX PEDESTAL

WARNING: **<u>ONLY</u> NON-COMBUSTIBLE MATERIAL MAY BE USED FOR THE FIREBOX PEDESTAL!**

FIREBOX ASSEMBLY

2

1) BASE –Spread a thin layer of concrete mortar or construction adhesive on the top of the firebox pedestal. Place the firebox base on the pedestal. Using the layout sketch, align the front of the base with the firebox base line and center the firebox along the center line. Make sure the Base is level.

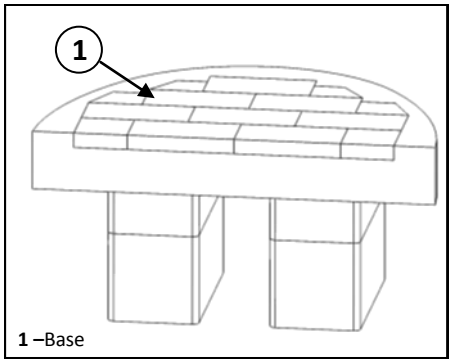

1 –Base

2) LOWER BACK –Apply a 5" wide thin layer of the included refractory mortar to the outside top edge of the base where the Lower Back will rest. Place the Lower Back in place and rotate the piece slightly back and forth to squish the mortar into place. Align the back and sides of the Lower Back and Base.

3) UPPER BACK (MODELS KIVA24 AND KIVA30 ONLY) – Following the above procedure, spread a layer of refractory mortar and place the Upper Back section on top of the Lower Back. Again, align the back and sides of the pieces.

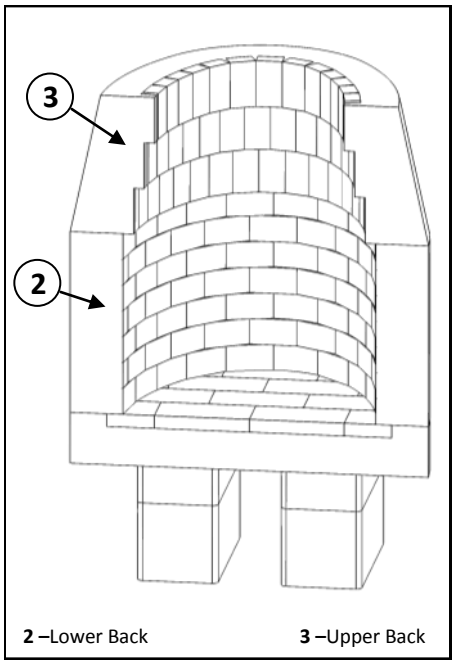

2 –Lower Back **3** –Upper Back

4) COMBUSTION AIR TUBE –Place the Combustion Air Tube against the Firebox Base. The "L" door should rest on the Firebox Base when opened. Attach the tube to the face of the Base using four 2 $^{1}/_{2}$" wood screws.

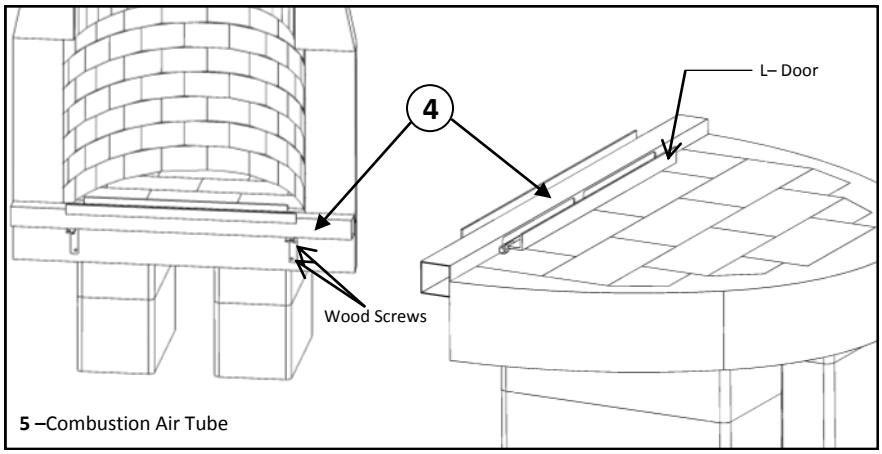

5 –Combustion Air Tube

5) FRONT ARCH –Apply refractory mortar to the front edges of the Lower and Upper Back pieces and to the top of the Front Arch section. Place the Front Arch into place and attach using four $^{1}/_{4}$" x 7" Lag Bolts. Avoid placing any weight onto the Combustion Air Tube before the bolts are attached.

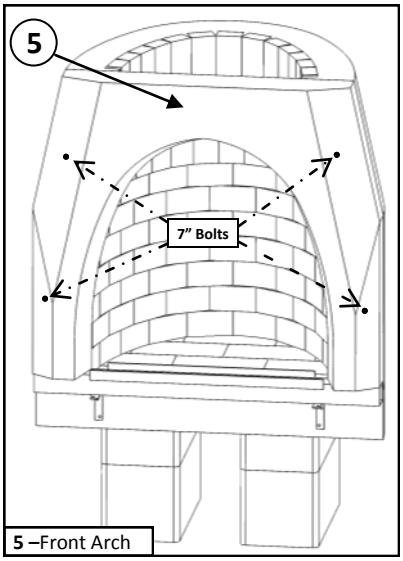

5 –Front Arch

6) TOP –Now install the top section of the fireplace. Again, spread a thin layer of refractory mortar where the pieces will meet, and align the back and sides of the pieces.

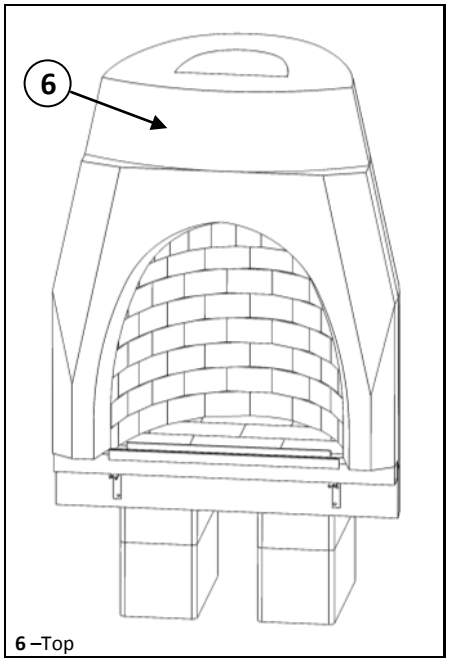

6 –Top

FIREBOX ASSEMBLY (CONTINUED):

7) DOOR FRAME – The Door Frame allows an Adobelite Screen Door or Glass Door to be used with the fireplace. Begin by attaching the Door Frame to the Combustion Air Tube. Position the Door Frame on top of the Air Tube and allow a $^{1}/_{2}$" space between the flat strap on the Air Tube and the Door Frame. Use two $1^{1}/_{4}$" x #8 self drilling (black head) screws to secure the Door Frame to the Combustion Air Tube.

Level the Door Frame, then secure the Door Frame to the Front Arch using two 5" (black head) wood screws.

Finally, the Ball Catch (FIG. 7B) needs to be installed to the door frame. Begin by drilling a 1" deep x $^{3}/_{4}$" dia. hole through the mounting tab and into the Front Arch. Slide the Ball Catch up into the hole and secure it to the mounting tab on the Door Frame with the two provided brass screws.

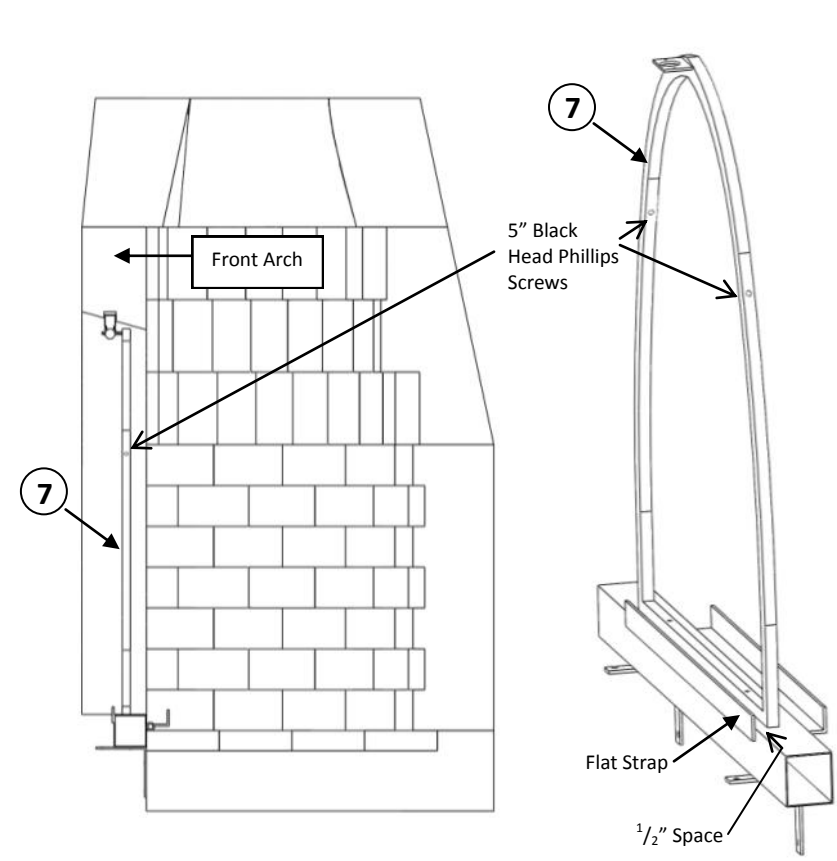

7A –Door Frame

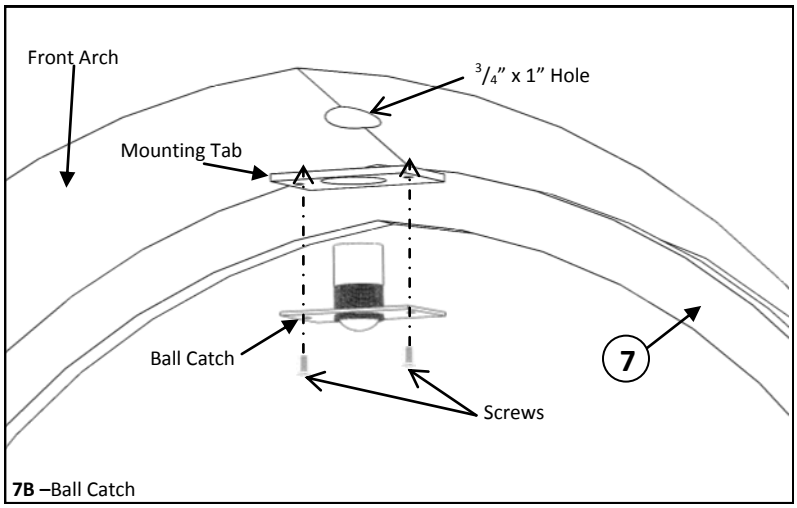

7B –Ball Catch

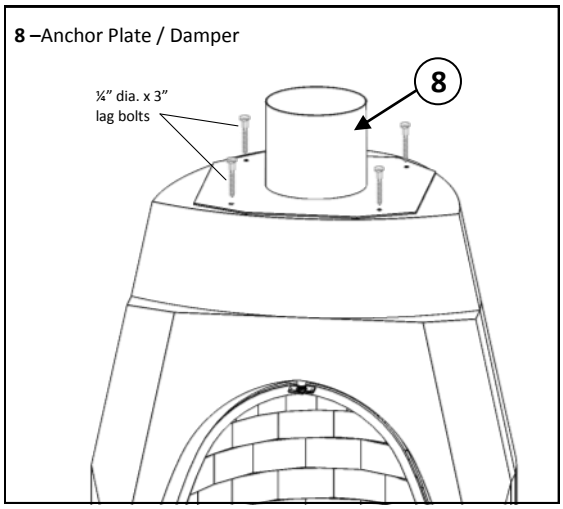

8 –Anchor Plate / Damper

8) ANCHOR PLATE / DAMPER– Apply a thin layer of refractory mortar to the top of firebox where the Anchor Plate with Damper will sit. Align the back edge of the Anchor Plate opening with opening in the firebox top section. Check the operation of the Damper by fully opening and closing the Damper to insure the damper plate is not hitting the firebox. Secure the Anchor Plate using four ¼" dia. x 3" long lag bolts.

WARNING: A *MINIMUM* OF 2" AIR CLEARANCE MUST BE MAINTAINED BETWEEN ALL CHIMNEY COMPONENTS AND COMBSTIBLE MATERIALS. ALL INSTRUCTIONS PROVIDED BY CHIMNEY MANUFACTURERS MUST BE STRICTLY ADHERED TO. FAILURE TO PROPERLY FOLLOW ALL CLEARANCES AND INSTRUCTIONS MAY RESULT IN A SERIOUS FIRE CAUSING INJURY OR DEATH!

CHIMNEY OFFSET

An offset and return elbow set is required for installation. Each elbow set will contain an offset (or starter) elbow, and a return elbow. The return elbow, which will be used last (step 12), has straps attached to it that are attached to the walls in order to support the chimney.

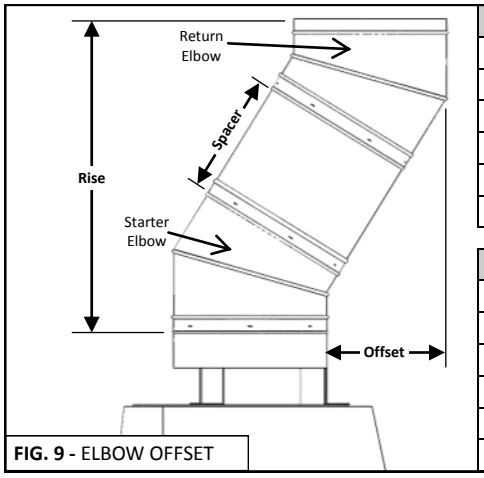

FIG. 9 - ELBOW OFFSET

KIVA 18 and KIVA 24 (8" I.D. Chimney)		
Spacer Length	**Offset**	**Rise**
0" (Elbows Only)	3"	11"
12"	8 1/4"	20"
18"	11 1/4"	25 1/4"
24"	13 1/2"	29 1/4"
30"	16 1/2"	34 1/4"

KIVA 30 (10" or 12" I.D. Chimney)		
Spacer Length	**Offset**	**Rise**
0" (Elbows Only)	4 3/8"	16 3/8"
12"	9 3/4"	25 1/2"
18"	12 3/4"	30 3/4"
24"	15"	34 3/4"
30"	18"	40"

CHIMNEY INSTALLATION

Each double wall chimney section consists of an inner and outer flue pipe. The two sections of chimney pipe are not attached to each other, and therefore must be installed individually. As the flue sections are assembled, the inner flue section will slip to the inside of the section below. The outer section of pipe will slide over the hemmed edge of the section below.

When installed properly, the chimney sections will "snap" into place, securely locking the two pieces together. If the chimney is pulled upward it will not separate from the pipe below if it is properly locked. Check both the inner and outer sections of chimney when assembling the flue. Screws are not necessary to keep the chimney sections together.

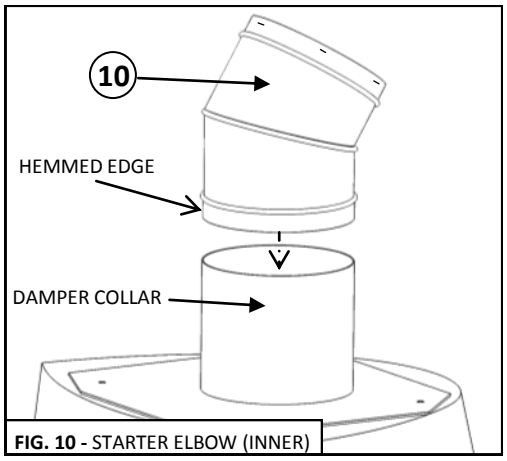

FIG. 10 - STARTER ELBOW (INNER)

10) STARTER ELBOW (INNER) – Begin the chimney installation by inserting the hemmed edge of the inner starter elbow *inside* the damper collar. The inner chimney pipe slips into the inside of the damper collar so that any soot buildup will fall into the firebox.

Align the inner Starter Elbow so that it points directly back away from the Firebox face. Secure the inner Starter Elbow to the Damper Collar by using four #12 x 3/4" self drilling hex head screws.

11) STARTER COLLAR – The Starter Collar is used to support the outer chimney section, while the Anchor Plate / Damper supports the inner chimney. Attach the legs of the Starter Collar to the Anchor Plate with the supplied #12 x 3/4" self drilling hex head screws.

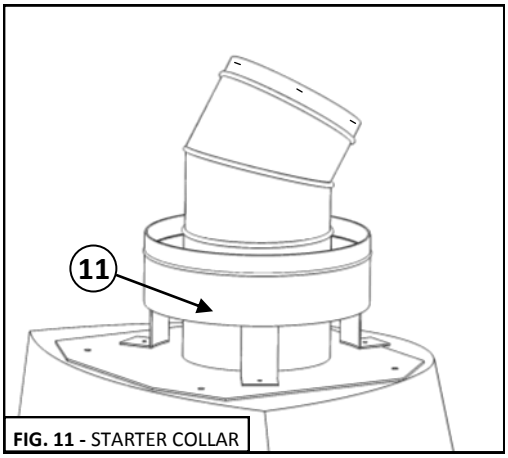

FIG. 11 - STARTER COLLAR

WARNING: THE OPENINGS IN THE STARTER COLLAR AND THE AIR SPACE BETWEEN THE FLUE SECTIONS MUST NOT BE OBSTRUCTED. NEVER USE BLOWN INSULATION TO FILL THE CHIMNEY.

CHIMNEY INSTALLATION (CONTINUED):

WARNING: CHIMNEY ELBOWS MUST NOT EXCEED 30 DEGREES FROM VERTICAL. DO NOT PLACE TWO (OR MORE) 30 DEGREE ELBOWS TOGETHER TO CREATE AN ANGLE GREATER THAN 30 DEGREES!

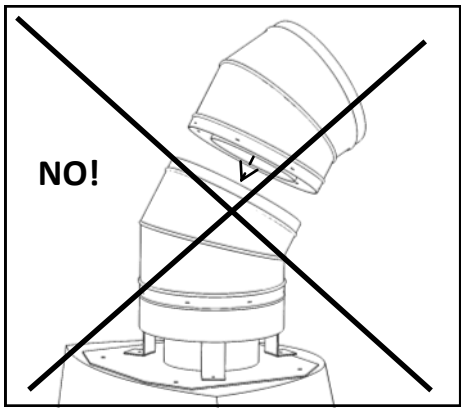

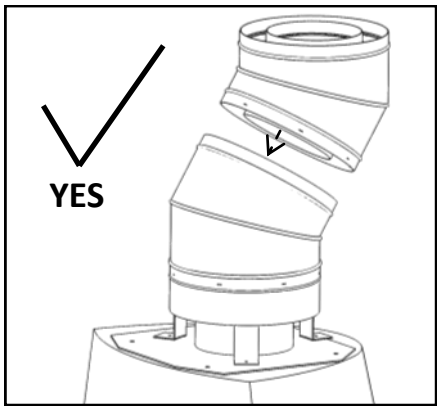

12) STARTER ELBOW (OUTER) – Now, position the outer Starter Elbow into place around the inner Elbow. Slide the outer Elbow to the outside of the Starter Collar and slide it down over the hemmed edge of the Starter Collar until it is in contact with the bead.

13) SPACER CHIMNEY SECTION – Typically, for models KIVA18 and KIVA24, a 12" length of chimney pipe is used between the Starter Elbow and Return Elbow. For KIVA30 models an 18" length of chimney pipe is used in most installations. Refer to Offset and Rise chart on Page 11 (FIG. 9) for other combinations of chimney.

Make sure the chimney will be offset far enough to clear the top portion of the Adobelite Kiva Frame (refer to dimensions A and E in Layout charts, Pages 7-8). Firmly push both the inner and outer pipes into the Starter Elbow until they "snap" lock into place.

14) RETURN ELBOW – Position the Return Elbow so that the chimney pipe is returned to a vertical position. Again, firmly press the pipes into place locking the connections. Attach the Return Elbow pipe straps to the walls. The straps should be screwed into studs in the walls to provide support for the straight chimney sections that will be installed next.

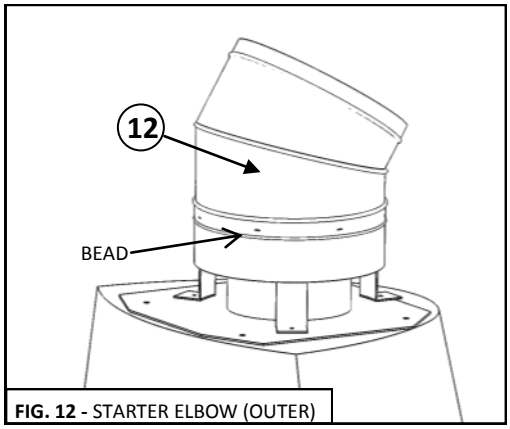

FIG. 12 - STARTER ELBOW (OUTER)

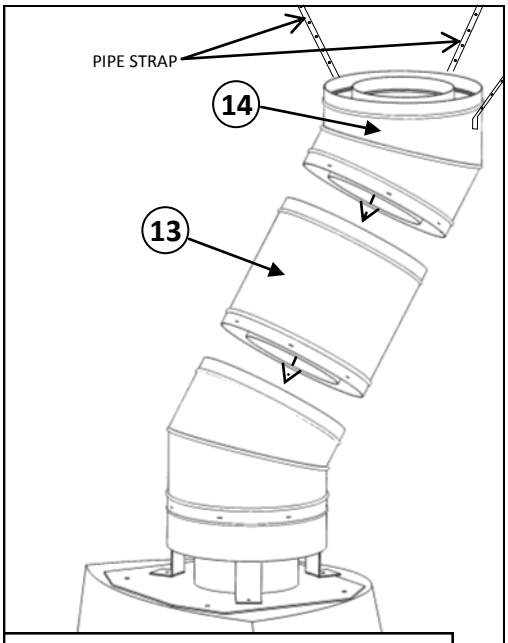

FIG. 13 - SPACER CHIMNEY AND RETURN ELBOW

CHIMNEY INSTALLATION (CONTINUED):

15) STRAIGHT CHIMNEY SECTIONS – Before running the straight chimney through the roof, slide the Firestop Spacer (shown in FIG. 16) over the Return Elbow. Now, snap the remaining Straight Chimney sections into place.

If the chimney is 30' or higher, a support section (a 4-strap x 12" length of pipe) is required after a straight chimney section above the fireplace run, or above a Return Elbow. The support section will support the increased weight of the chimney.

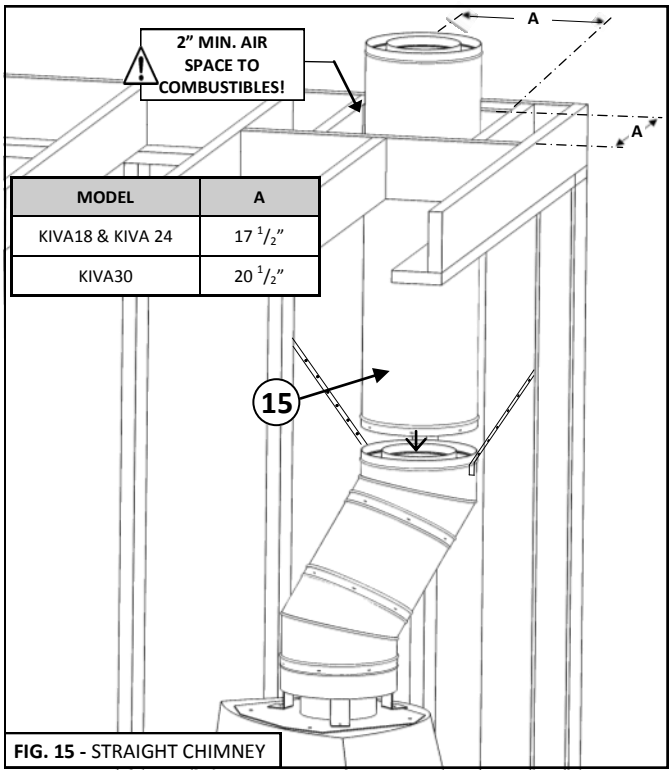

MODEL	A
KIVA18 & KIVA 24	17 $^1/_2$"
KIVA30	20 $^1/_2$"

FIG. 15 - STRAIGHT CHIMNEY

10-FOOT RULE

All chimney terminations must extend at least 3' above the highest point where it passes through the roof and must be 2' above the peak of the roof or any other building structure within a horizontal distance of 10'.

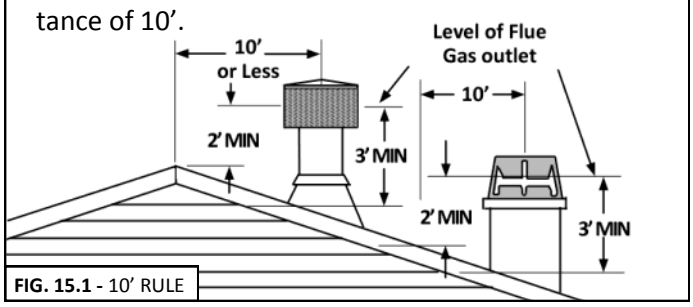

FIG. 15.1 - 10' RULE

16) FIRESTOP SPACERS – Firestop Spacers are required at each point where the chimney penetrates a floor or ceiling joist space. Attach Firestop Spacer to joist using wood screws.

If the chimney pipe passes through a framed opening into an attic space, the Firestop must be placed in the attic floor. When the pipe passes through a framed opening into living space above, the Firestop must be placed onto the ceiling from below.

Refer to local building codes and restrictions for variations in Firestop spacer requirements.

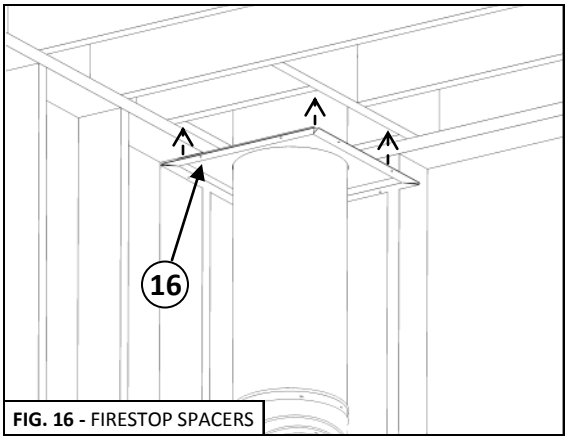

FIG. 16 - FIRESTOP SPACERS

17) CHIMNEY ROOF FLASHING – A flat Chimney Roof Flashing is used for flat roofs and chimney chases. For pitched roofs a pitched flashing is used. Slide the Chimney Roof Flashing down over the last section of straight chimney penetrating the roof or chase and attach to roof.

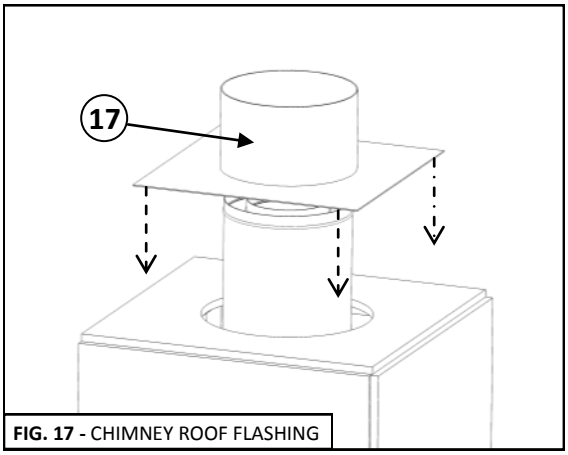

FIG. 17 - CHIMNEY ROOF FLASHING

IMPORTANT: If an exposed portion of chimney is greater than 5' above the roof line, use support wires to keep chimney secure. The support wires may be attached to the outer pipe of the chimney with screws but must not penetrate the inner flue pipe.

WARNING: **DO NOT SEAL VENTILATION OPENINGS ON THE ROOF FLASHING!**

CHIMNEY INSTALLATION (CONTINUED):

18) STORM COLLAR – Slide the Storm Collar down around the outside chimney pipe, just above the Roof Flashing, and tighten. Seal the Storm Collar against the chimney pipe with a weather proof caulk.

19) TERMINATION CAP – Finally, slide the inside chimney of the Termination Cap to the inside of the straight chimney sections and secure the tabs to the outside chimney pipe with screws. Do not pierce the inner chimney pipe with the screws.

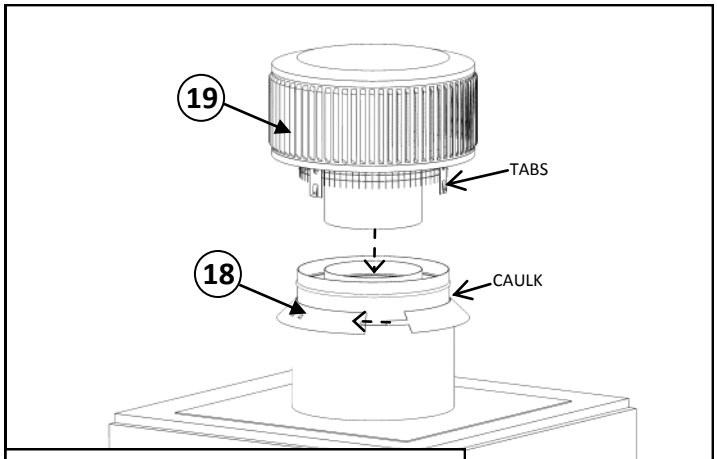

FIG. 18 - STORM COLLAR AND TERMINATION CAP

OUTSIDE AIR KIT INSTALLATION:

WARNING: **FOR PROPER OPERATION THIS FIREPLACE REQUIRES THE OUTSIDE AIR KIT TO BE INSTALLED.**

The Outside Air Kit is used to provide outside combustion air to the firebox, therefore not using air from the interior of the house. When installed, one end will be open and supply air to the cavity formed by the Adobelite Kiva Frame and walls. The air will then be drawn into the firebox through the Combustion Air Tube (see Step 5, page 9), and up between the inner and outer chimney pipes, cooling the inner pipe down.

20) OUTSIDE AIR VENT – If the fireplace is located against an exterior wall (FIG 20.1), use a hole saw to cut a hole completely through the exterior wall. Use the layout charts (Pages 5-6) to make sure that the Adobelite Kiva Frame will cover the hole and Outside Air Vent. The center of the hole should be located about 8” from the bottom of the wall. If the fireplace is not located on an exterior wall, the outside air can be brought down from the chimney chase (FIG 20.2). Cut a 4” hole located on a vertical face of the chimney chase and attach the Outside Air Vent.

21) ALUMINUM FLEX DUCT – When the Outside Air Vent is installed at a height lower than the firebox base, the Flex Duct is not needed. Otherwise, connect the flex duct to the outside air vent using a 4” pipe clamp and bring the open end down below the base about 6” off the ground.

FIG. 20.1 - OUTSIDE AIR VENT (EXTERIOR WALL)

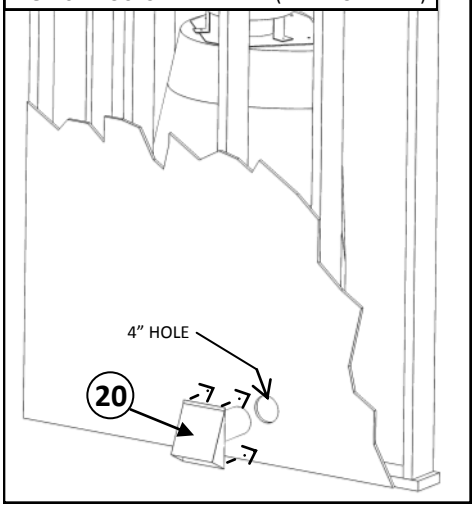

FIG. 20.2 - OUTSIDE AIR VENT (CHIMNEY CHASE)

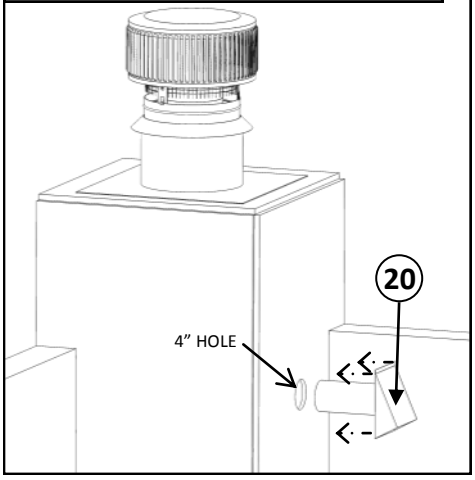

FIG. 21 - ALUMINUM FLEX DUCT

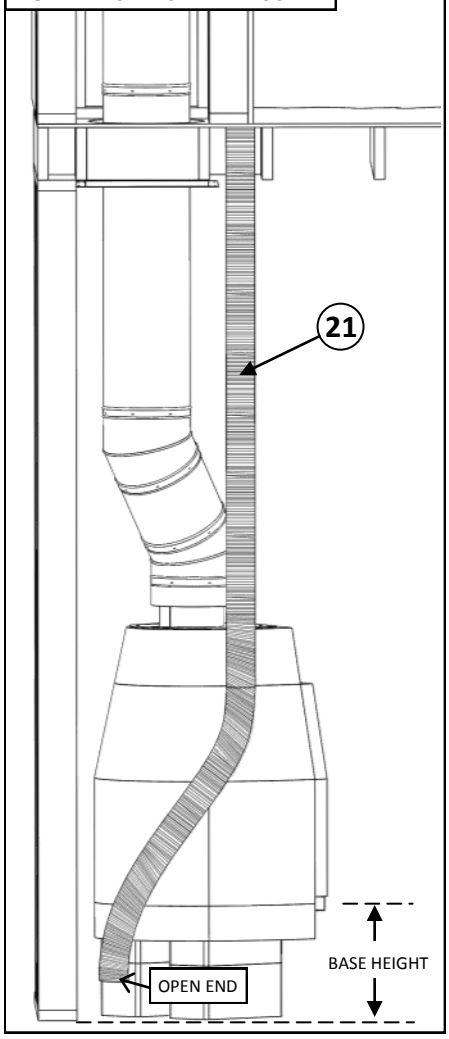

KIVA FRAME INSTALLATION:

WARNING: Use care and wear gloves when handling the frame and diamond lath pieces. Cut edges of the diamond lath mesh are very sharp!

WARNING: THE FIREBOX MUST BE FINISHED WITH THE ADOBELITE KIVA METAL FRAME OR OTHER NON-COMBUSTIBLE MATERIALS. CLEARANCES TO COMBSTIBLE MATERIALS AND FRAMING MUST BE MAINTAINED.

ATTACH LATH TO COMBUSTION AIR TUBE (FIG. 22)

Before placing the Kiva frame around the firebox, Lath needs to be attached to the combustion air tube.

Cut a strip of lath 24” x 27”. Fold the 24” side in half and place a sharp crease at the bend. Open the piece up and place the bent edge 1” down from the top of the air tube. Using the #6 x $^1/_2$” self drilling Phillips washer head screws, attach the lath every 3”. Finally bend the bottom section of the lath up to meet the top section so they can both pass through the opening of the Kiva frame.

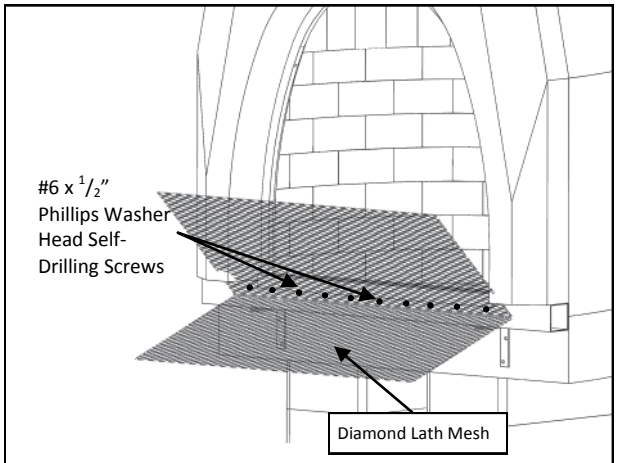

FIG. 22 – COMBUSTION AIR TUBE LATH

ATTACH LATH FROM FIREBOX TO FRAME (FIG. 23)

Begin by placing the Kiva Frame into position in front of the Firebox. Measure from the frame to the corner or flatwall to make sure the frame equal distance on both sides. Bring the folded lath that was attached to the Combustion Air Tube (FIG. 22) through the opening in the Kiva Frame. Attach the folded section of lath to the Kiva Frame using #6 x $^1/_2$” Hex Head Self-Drilling Screws. Any loose sections of lath can also be attached by fishing bailing wire through the pieces and tightening.

Next, cut several strips of diamond lath mesh 16” wide. Place the lath strips against the inside Front Arch even with the Door Frame (FIG. 23). Using $1^5/_8$” washer head screws, attach the lath to the Front Arch every 4”. Cut strips in the opening lath from the outside edge up to the opening bar. Fold the strips back onto the frame. Attach the lath strips to the frame using #6 x $^1/_2$” self drilling hex head screws, or with bailing wire.

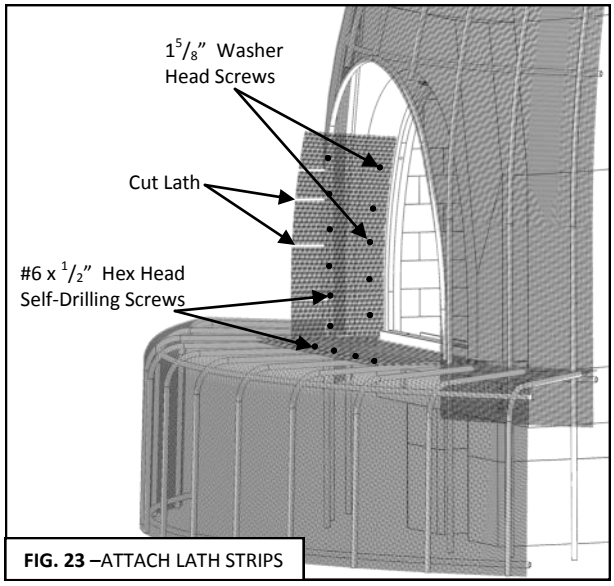

FIG. 23 –ATTACH LATH STRIPS

ATTACH KIVA FRAME TO WALLS AND CEILING

Using #8x $1^5/_8$” Phillips washer head pointed screws, attach the lath from the frame to the walls and the ceiling. Screws should attach the lath about every 4”. Some of the screws will only go into the sheetrock and not the studs. Fold the lath back onto the Kiva Frame and attach to the metal tubing using self drilling screws, or tie the lath down with bailing wire so that it is secure. Any gaps in the lath can be filled in with by cutting strips of lath and attaching to the Kiva Frame and walls / ceiling.

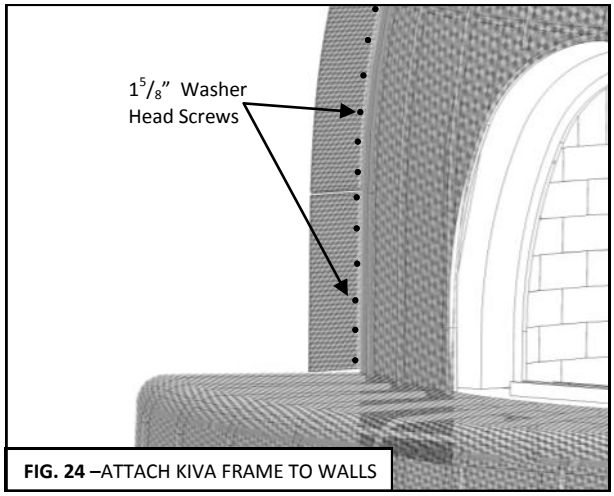

FIG. 24 –ATTACH KIVA FRAME TO WALLS

FINISHING THE FIREPLACE

3-COAT PLASTER FINISH

The fireplace can be finished with any indoor plaster system. Typically a 3-coat system is used. The first coat should be a cement based product with fiberglass and sand. This will provide a solid base for the other coats. The first coat can be mixed slightly on the dry side to help it bond to the Kiva Frame wire mesh. Allow the first coat to dry completely before applying the 2nd coat.

The 2nd coat should contain fiberglass, and may or may not contain sand and cement. Many indoor plasters are gypsum based. Apply the 2nd coat using a trowel, and then smooth out the plaster using water and a float (or sponge). When complete the 2nd coat will be fairly smooth but will have a “grainy” of stucco finish.

Allow one full week or more for the first two coats to completely dry before applying the final coat of plaster. The final coat does not contain fiberglass and is generally applied with a hard trowel to give a smooth appearance, but can be also be finished any way desired.

SEALING THE PLASTER

The plaster can be sealed which will help keep the plaster from discoloring, and also make the fireplace easier to clean. Many types of sealers are available, such as: wax sealers, which will give the plaster a shiny (almost wet look), and masonry and grout sealers, which are available in matte and gloss finishes. Check with your plaster supplier for options.

PAINTING THE PLASTER

Once the plaster is completely dry, the fireplace can be painted if desired. Adobelite recommends using a latex based primer and paint. If the fireplace has been burned in, clean any soot buildup along the opening of the fireplace using a mild dish detergent and water before painting.

ADOBELITE KIVA FIREPLACE OPTIONS:

Nicho (Set of 2)

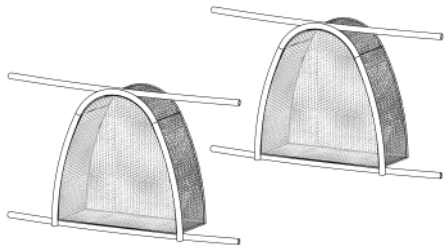

Nichos can be added to any of the Adobelite Kiva Frames. Inside measurements before plaster are: 12" wide x 12" tall x 5" deep.

Sidewall Banco

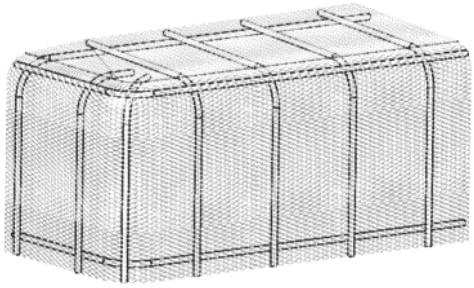

Sidewall Bancos are 15 $^{3}/_{4}$" tall x 15 $^{3}/_{4}$" deep (before plaster) to match the height of the Adobelite Kiva Frame hearth extension and are available in lengths of 2' to 10'. Specify left or rights side when ordering.

Kiva Wood Grate

Hold the logs in a vertical position to better fit the Kiva Fireplace shape. Holds a 16" log.

Wood Storage Bin

The Wood Storage Bin has an interior size of 24" wide x 12" high x 16" deep. It fits in the center of the hearth extension or the Sidewall Banco

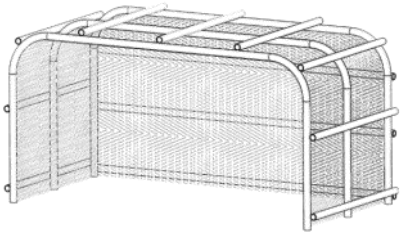

Glass Door and Screen Door

Tempered Glass and Ceramic Glass doors are available. Tempered glass doors can be used for gas log burning systems, and also to seal off a wood burning fireplace when not burning. Ceramic Glass doors are used when burning wood.

Screen doors are hand riveted and snap perfectly into place using Adobelite's door frame for a clean finish.

GLASS DOOR

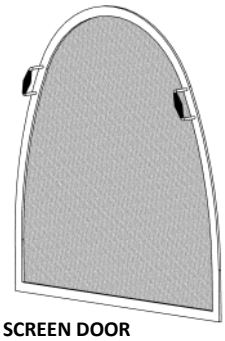

SCREEN DOOR

Gas Log Conversion System

Designed around a patented round kiva burner system to maintain an authentic kiva fire, the Gas Log Conversion System features a manually operated safety pilot valve, kiva log grate, 5-pc ceramic gas log set, glowing embers, lava rock, and all plumbing fittingS to hook up to a $^{1}/_{2}$" gas line .

PATENTED ROUND KIVA BURNER

5-PIECE CERAMIC LOG SET